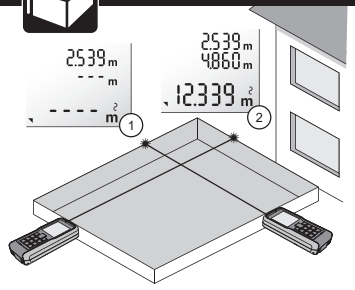

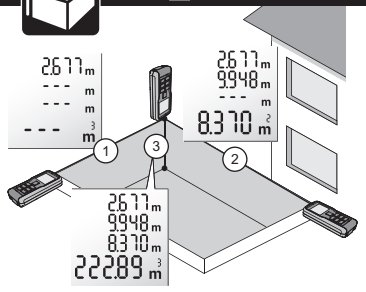

1x = Set back or clear value

2x = Clear all

+ **2 sec. =** Delete History

2 Sec. = Off

⚠ WARNING

The Meter produces a visible laser beam which emerges from the front of the Meter.

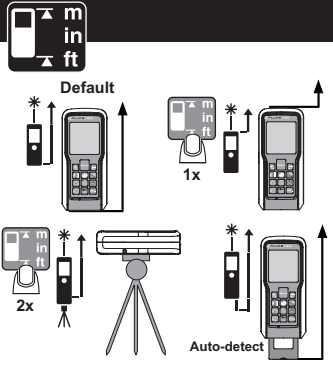

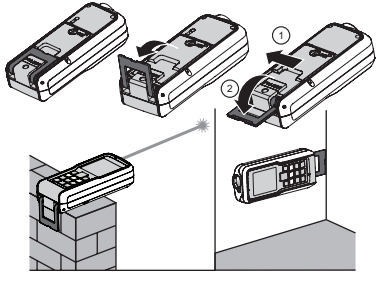

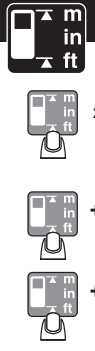

2 Sec. =

0.000 m	0.00 ft
0.000⁰ m	0'00" 1/32 *
0.00 m	0.000 in
	0 in 1/32

* default

+ **=** **On/Off**

+ **=** **On/Off**

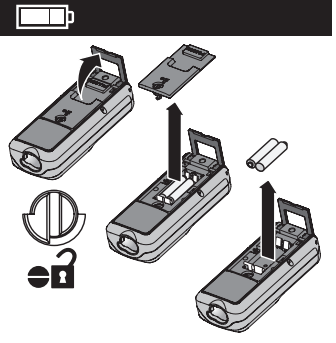

Quick Reference Guide

FLUKE®

Laser Distance Meter

424D

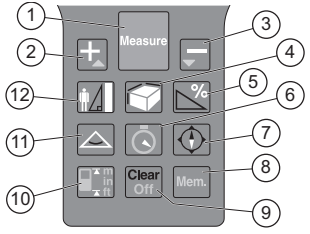

Buttons

1. Measure/Min Max/Power On
2. Plus (+)/Scroll Up
3. Minus (-)/Scroll Down
4. Area/Volume
5. Tilt Functions/Height Tracking/Leveling
6. Timer
7. Compass
8. Memory
9. Clear/Off
10. Reference/Units
11. Corner Angle/Triangle Area
12. Indirect Measurement (Pythagoras)/ Stake Out

PN 4117726 June 2012, Rev. 1, 7/16

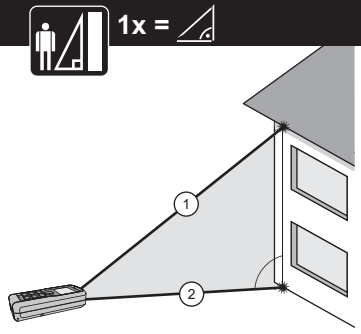
1x =
1
2

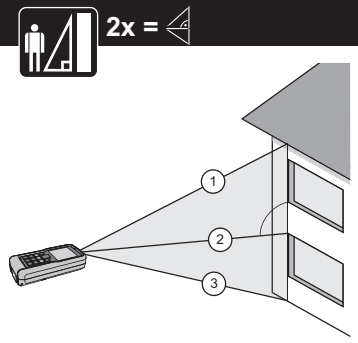
2x =
1
2
3

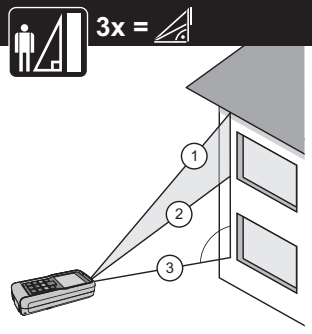
3x =
1
2
3

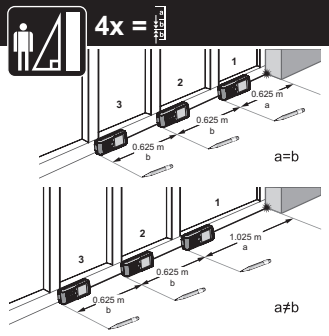
4x =
1
2
3
0.625 m
a
0.625 m
b
0.625 m
b
a=b
1
2
3
1.025 m
a
0.625 m
b
0.625 m
b
a≠b

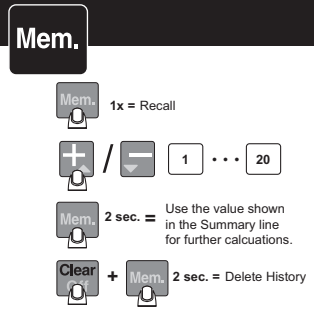
Mem.
Mem.
1x = Recall
/
1
20
Mem.
2 sec. =
Use the value shown
in the Summary line
for further calcuations.
Clear
+
Mem.
2 sec. = Delete History

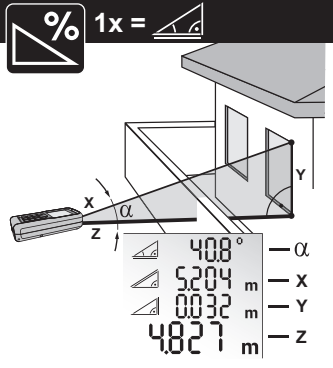
%
1x =
X
α
Z
Y
40.8 °
5.204 m
0.032 m
4.827 m
α
X
Y
Z

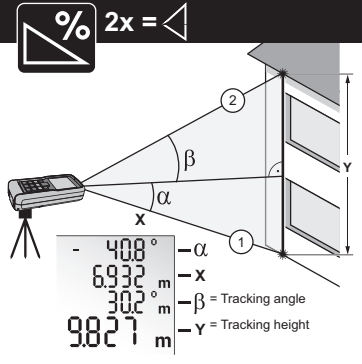
%
2x =
2
β
α
X
1
Y
- 40.8 °
6.932 m
30.2 °
9.827 m
α
X
β = Tracking angle
Y = Tracking height

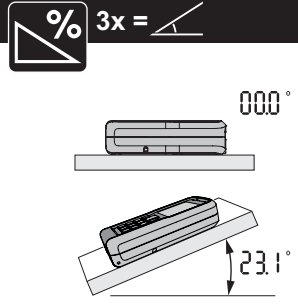
%
3x =
0.0 °
23.1 °

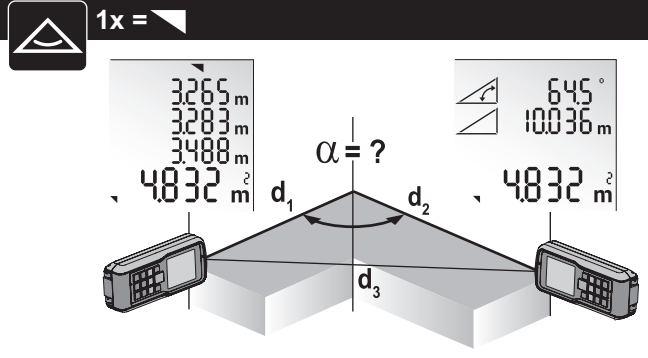
1x =
3.265 m
3.283 m
3.488 m
4.832 m²
α = ?
d1
d2
d3
64.5 °
10.036 m
4.832 m²